Germs in Space

Joshua Lederberg, Exobiology, and the Public Imagination, 1958–1964

*By Audra J. Wolfe**

ABSTRACT

Under the leadership of Joshua Lederberg, some American biologists and chemists proposed exobiology as the most legitimate program for space research. These scientists used the fear of contamination—of earth and other planets—as a central argument for funding "nonpolitical," "scientifically valid" experiments in extraterrestrial life detection. Exobiology's resemblance to popular science fiction narratives presented a significant challenge to its advocates' scientific authority. Its most practical applications, moreover, bore an unseemly resemblance to the United States Army's research on biological weapons. At the same time that exobiologists wanted to use the media to attract support for their program, they had to monitor their statements carefully in order to maintain their view of exobiology as a peaceful, scientifically valid research program. In examining how exobiology's creators positioned their work in comparison to other space sciences as well as science fiction, this case study highlights how cultural and political imperatives entered science through practice and narrative during the Cold War.

Since there are still so many unanswered scientific questions and problems all around us on earth, why should we start asking new questions and seeking out new problems in space? How can the results justify the costs? —*"Introduction to Outer Space" (1958)*

THE 1957 LAUNCH OF THE SOVIET *SPUTNIK* shone an unwanted spotlight on American science policy makers. Congress, the military, and most of the public demanded immediate scientific and technological achievement in space, but President Dwight

* Rutgers University Press, 100 Joyce Kilmer Avenue, Piscataway, New Jersey 08854; audraw@rci.rutgers.edu.
I wish to thank Gerard Fitzgerald, Susan Lindee, Charles Rosenberg, Rena Selya, Chloe Silverman, James Strick, and two anonymous referees for *Isis* for their insightful comments on previous drafts of this essay. Walter Hickel at the National Library of Medicine and Janice Goldblum at the National Academy of Sciences made my archival experiences a pleasure. I am especially grateful to Joshua Lederberg, who continued to respond to my queries even when it became clear that our interpretation of these events differed. This research was supported in part by a grant from the Chemical Heritage Foundation, Philadelphia, Pennsylvania.

Isis, 2002, 93:183–205

0021-1753/02/9302-0001$10.00

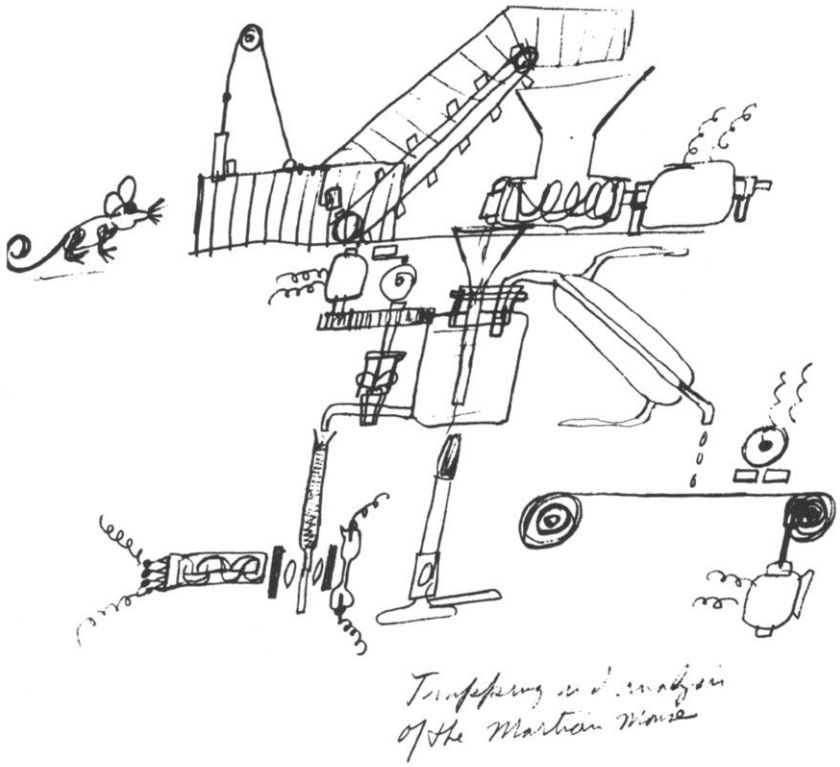

MacNichol?

The author of this notebook doodle was only half-joking when he suggested this apparatus to detect extraterrestrial life. Attributed to E. F. MacNichol, WESTEX 5, Box 26, Lederberg Papers. Reproduced with permission of E. F. MacNichol.

Eisenhower and his scientific advisors doubted the strategic benefits of space exploration. Physical scientists such as James Killian, the president's Special Assistant for Science and Technology, recognized the political symbolism of space exploration yet believed that the rest of the world would be more impressed by sound scientific research of "intrinsic merit" than by meaningless technological feats.[1] But at the dawn of the space age, it was not at all clear what would constitute "good science" in space. Administrators at the newly organized National Aeronautics and Space Administration (NASA) quite logically suggested benefits to astronomy, geodesy, and the atmospheric sciences. Oddly enough, however, attention outside NASA soon turned toward the study of life outside of earth, later called exobiology. Scientists in the National Academy of Sciences (NAS) and the National Research Council (NRC) envisioned the search for extraterrestrial life as one of the most "scientifically valid" research initiatives for the space program. With the space race limiting the potential for international cooperation in the physical and atmospheric sciences, exobiology offered one of the best opportunities to cross national boundaries and address meaningful scientific questions.

This case study of the origins of American exobiology focuses on the actions and motivations of the life scientists who participated in the NAS's Space Science Board (SSB) during the early days of the space program. Like many members of the scientific community, these life scientists harbored grave doubts about man-in-space programs and would grow increasingly frustrated in the 1960s as the nascent Apollo program absorbed more resources. Following the lead of the Stanford geneticist and Nobel laureate Joshua Lederberg, these scientists hoped that their exobiology program could serve as a neutral scientific counterpart to the hawkish satellite, missile, and manned-craft programs that formed the technological and economic core of the space program. In practice, however, the need to build institutional, political, and scientific support placed them in a more ambiguous relationship with Cold War priorities. These scientists, who explicitly positioned themselves as civilians, found themselves embedded in complex and sometimes contradictory relationships with the media, the state, and political ideology.

This study is neither a disciplinary history of exobiology nor a chronicle of attempts to locate life outside of earth. Rather, in examining how exobiology's creators positioned their work in comparison with other space sciences and in contrast to science fiction, I highlight how cultural and political attitudes enter science through rhetorical choices and narrative devices.[2] Language, image, and metaphor were particularly salient elements of

[1] For early statements on space policy see documents in John M. Logsdon *et al.*, eds., *Exploring the Unknown: Selected Documents in the History of the U.S. Civil Space Program* (Washington, D.C.: NASA History Office, 1995), Vol. 1, pp. 345–372. There is a vast literature on the history and objectives of the American space program. Some of the best general histories are Walter McDougall, . . . *The Heavens and the Earth: A Political History of the Space Age* (New York: Basic, 1986); James L. Kauffman, *Selling Outer Space: Kennedy, the Media, and Funding for Project Apollo, 1961–1963* (Tuscaloosa: Univ. Alabama Press, 1994); Roger D. Launius, *NASA: A History of the U.S. Civil Space Program* (Malabar, Fla.: Krieger, 1994); and Logsdon, *The Decision to Go to the Moon: Project Apollo and the National Interest* (Cambridge, Mass.: Harvard Univ. Press, 1970). For the epigraph see President's Scientific Advisory Committee, "Introduction to Outer Space," 26 Mar. 1958, p. 6; rpt. in James R. Killian, Jr., *Sputnik, Scientists, and Eisenhower: A Memoir of the First Special Assistant to the President for Science and Technology* (Cambridge, Mass.: MIT Press, 1977), pp. 288–299.

[2] Paul Edwards and Lily Kay have offered particularly compelling examples of how the imperatives of Cold War political culture became embedded in the language of scientific ideas. See Paul N. Edwards, *The Closed World: Computers and the Politics of Discourse in Cold War America* (Cambridge, Mass.: MIT Press, 1996); and Lily E. Kay, *Who Wrote the Book of Life? A History of the Genetic Code* (Stanford, Calif.: Stanford Univ. Press, 2000). The history of exobiology and attempts to locate life outside of earth are addressed in Steven J. Dick's excellent *The Biological Universe: The Twentieth-Century Extraterrestrial Life Debate and the Limits of Science* (New York: Cambridge Univ. Press, 1996).

Cold War geopolitics, but the Cold War was more than just talk. The story of exobiology's origins complements recent histories that have demonstrated the pervasive influence of Cold War institutions on postwar science, technology, and medicine. Building on the work of Ian Hacking, Stuart Leslie, and Paul Forman, a number of scholars have argued that the presence of military funds in the university not only influenced the selection of research questions but actually fostered a military mind-set among a generation of scientists and engineers.[3] The works of Ronald Doel and Allan Needell have demonstrated that this mind-set encouraged intimate (and often hidden) relationships between science, intelligence, and foreign policy.[4] Exobiology was premised on the need for international cooperation, but "international cooperation" as defined by the U.S. Department of State included psychological warfare and intelligence gathering as well as traditional scientific collaboration.

The scientists I describe here were not building bombs, constructing surveillance equipment, or, for the most part, even accepting military contracts for their own laboratories. But by actively defining the American space program as one with "scientifically valid" goals, they supported the idea of the United States as an "open society"—a primary component of the American Cold War public relations arsenal.[5] The study of exobiology allowed these civilian scientists simultaneously to proclaim their independence from and offer their support to the U.S. quest for a place in the technoscientific world order. I begin by describing the entry of life scientists into space science advising networks. The following section explores exobiology's status as a contested scientific discipline, hovering somewhere between elite science and science fiction. The final section suggests the practical and symbolic benefits that might accrue from an ambitious program in exobiological research. The science of exobiology became a particularly compelling site for demonstrating American commitment to the scientific ideals of international cooperation and freedom of inquiry, yet it brought supposedly disinterested scientists directly in contact with the Army's biological weapons facilities.

DEFINING A ROLE FOR THE LIFE SCIENCES IN SPACE

Before NASA's creation in October 1958, the president, Congress, and the Department of Defense relied on a host of advisory boards to examine the requirements for and possibilities of spaceflight. Created in response to *Sputnik,* the new President's Scientific Ad-

[3] Ian Hacking, "Weapons Research and the Form of Scientific Knowledge," *Canadian Journal of Philosophy,* 1986, *12*(Suppl):237–262; Stuart W. Leslie, *The Cold War and American Science: The Military-Industrial-Academic Complex at MIT and Stanford* (New York: Columbia Univ. Press, 1993); and Paul Forman, "Behind Quantum Electronics: National Security as Basis for Physical Research in the United States, 1940–1960," *Historical Studies in the Physical and Biological Sciences,* 1987, *18:*149–229. Scholarly attention to links between postwar science and Cold War institutions has multiplied since the publication of these works. As an introduction see the essays by Roger Geiger, Paul Forman, and Ronald Doel in *Science After '40,* ed. Arnold Thackray, *Osiris,* 1992, 2nd Ser., *7;* Rebecca Lowen, *Creating the Cold War University: The Transformation of Stanford* (Berkeley: Univ. California Press, 1997); Robert Bud and Philip Gummett, eds., *Cold War, Hot Science: Applied Research in Britain's Defense Laboratories, 1945–1990* (Amsterdam: Harwood, 1999); and Michael Aaron Dennis, "'Our First Line of Defense': Two University Laboratories in the Postwar American State," *Isis,* 1994, *85:*427–455. See also two recent biographies of major scientific managers: G. Pascal Zachary, *Endless Frontier: Vannevar Bush, Engineer of the American Century* (New York: Free Press, 1997); and Allan Needell, *Science, Cold War, and the American State: Lloyd V. Berkner and the Balance of Professional Ideals* (Amsterdam: Harwood, 2000).

[4] Ronald E. Doel, "Scientists as Policymakers, Advisors, and Intelligence Agents: Linking Contemporary Diplomatic History with the History of Contemporary Science," in *The Historiography of Contemporary Science and Technology,* ed. Thomas Söderqvist (Amsterdam: Harwood, 1997), pp. 215–244; and Needell, *Science, Cold War, and the American State.*

[5] For more on the notion of the "open society," especially in relation to the space program, see McDougall, *Heavens and the Earth* (cit. n. 1).

visory Committee (PSAC) spent much of its first year developing objectives and strategies for both the civilian and military efforts in space amid constant worries that the plans for space science experiments would not command international respect. The president also created a National Aeronautics and Space Council, which formulated similar space policy objectives for the executive branch. Outside the president's immediate circle, the NRC formed several committees, including a Committee on Bioastronautics to investigate possible physiological and psychological effects of spaceflight on humans.[6] All of these organizations were closely tied to military and security concerns, and many of their discussions and reports remained classified through the 1960s. For civilian scientists lacking security clearances, the most direct link to space science advising was through the NAS's Space Science Board.[7]

In August 1958 the NAS announced the formation of the SSB to "survey in concert the scientific problems, opportunities, and implications of man's advance into space." Combining the International Geophysical Year (IGY) Technical Panels on the Earth Satellite Program and Rocketry, the SSB initially received funds from the NSF and the Department of Defense; NASA contributed shortly after its creation later that year. Lloyd V. Berkner, president of the International Council of Scientific Unions and one of the leading figures in the American section of the IGY, was named chair. Although the NAS leadership had intended the SSB to examine all areas of space science, including the life sciences, its initial actions centered on the immediate physical problems of space travel and exploration. Of its eleven original committees, ten dealt with geochemistry, astronomy, orbits, vehicle design, meteorology, and similar fields. Only Committee 11, the Committee on Psychological and Biological Research, addressed life science issues. Berkner recruited committee members by stressing the importance of "mov[ing] promptly to assess the research objectives of the nation" and the need for timely recommendations "to capitalize on the new tools for basic scientific research." The rhetoric of nationhood and utilitarianism aside, the presence of high-profile NAS scientists on the board ensured at least a patina of scientific values over nationalistic goals. References to the need for "sound, sober, scientifically competent advice" and to the SSB's responsibility not only "to the Academy and the scientific community but to the nation" peppered SSB correspondence during these years.[8]

[6] In Mar. 1958 the PSAC published a best-selling pamphlet, "Introduction to Outer Space" (cit. n. 1). The pamphlet offered four compelling reasons to pursue space exploration aggressively: the "urge to explore," national defense, national prestige, and opportunities for scientific research. Declassified portions of the minutes of PSAC meetings during the Eisenhower administration have been released on microfilm as *The Papers of the President's Scientific Advisory Committee, 1957–1960,* ed. Alex Roland (Bethesda, Md.: Univ. Publications America, 1986). For the final recommendations of the National Aeronautics and Space Council see "U.S. Policy on Outer Space," 26 Jan. 1960, rpt. in *Exploring the Unknown,* ed. Logsdon *et al.* (cit. n. 1), Vol. 1, pp. 362–375. The Committee on Bioastronautics was jointly sponsored by the Armed Forces and consisted of career military officers as well as civilian academic scientists. A complete list of members and panels can be found in the folder marked AF/NRC Committee on Bioastronautics, Relationships, Space Science Board Papers (hereafter **SSB Papers**), Archives of the National Academy of Sciences (hereafter **NAS Archives**), Washington, D.C. During its two-year existence the committee published three issues of a newsletter: *Bioastronotes Newsletter,* AF/NRC Committee on Bioastronautics, NAS Archives.

[7] This is not to say, of course, that the SSB recommendations for experiments held the most sway among space agencies. For official histories of space science see Homer Newell, *Beyond the Atmosphere: Early Years of Space Science* (Washington, D.C.: NASA, 1980); and John E. Naugle, *First among Equals: The Selection of NASA Space Science Experiments* (Washington, D.C.: NASA, 1991).

[8] "National Academy of Sciences Establishes Space Science Board," 3 Aug. [1958], Beginning of Program, SSB Papers; Newell, *Beyond the Atmosphere,* pp. 12, 120; Lloyd Berkner to Edward Tatum, 9 Sept. 1958, WESTEX Ad hoc, Committees, SSB Papers (the same letter was also sent to Howard Curtis, L. E. Farr, E. F. MacNichol, and Otto Schmitt); and Ross Peavey to Berkner, 3 Mar. 1960, Reorganization, Psychological and Biological Research, SSB Papers (similar comments are ubiquitous in SSB correspondence).

While physicists, chemists, and engineers found immediate and obvious roles in the space program, creating a place for biologists required more imagination. After a decade of feverish progress in molecular biology, genetics, and immunology, biologists were particularly resistant to a "crash program" in space biology that might siphon support away from their own research. With a less obvious stake in space exploration, geneticists such as Joshua Lederberg found it difficult at first to regard the space race as anything other than a tasteless display of political might, a "circus" that overlooked the most important scientific issues of the day.[9] Doubts such as these put enormous pressure on the scientists who did support the program to suggest scientifically meaningful experiments for space.

The SSB's Committee on Psychological and Biological Research, chaired by the Rockefeller University physiologist H. Keffer Hartline, had difficulty from the start in articulating what they called "positive basic research plans." The Johns Hopkins University biophysicist E. F. MacNichol, for example, reluctantly agreed to serve on the committee but suggested that space science offered few opportunities for experiments that couldn't be conducted more cheaply on earth. (See Frontispiece.) Hartline himself was "not impressed" with NASA's proposed plans for life science experiments for the man-in-space program, which focused mostly on the effects of high altitude and weightlessness on various living things. Berkner would later argue that almost none of the scientific projects proposed by the SSB required manned spaceflight: work on vacuum systems, low gravity, and radiation could be replicated on earth, and much of the meteorological work could be performed at high altitudes within the atmosphere.[10]

Indeed, the administration's and NASA's insistence on a man-in-space program presented special challenges to the life scientists' participation. Engineers who opposed manned space travel but supported the idea of a space program could at least contribute toward launch vehicle development. NASA's tendency to equate space biology with high-altitude physiology, on the other hand, alienated many biologists. As Lederberg fretted, "the lunatic fringes of Mercury" were turning America's top scientists against participating in "what should be one of the outstanding scientific challenges in human history." Similarly, Lederberg worried that even if man-in-space could be shown to be a legitimate program, "it has been presented in such a fashion as to antagonize a large segment of the scientific community and this can only do the program itself and the whole national space effort a great deal of harm."[11] The perceived Soviet superiority in spaceflight cast additional doubt on the wisdom of a manned space program: American scientific research offered better odds for distinctive national achievement in space.[12] Instead of designing experiments for manned spaceflight, therefore, the Committee on Psychological and Biological

[9] Joshua Lederberg, interview by Audra Wolfe, Rockefeller Univ., 19 Aug. 2000 (Philadelphia: Chemical Heritage Foundation, Oral History Transcript no. 0199).

[10] E. F. MacNichol to Berkner, 29 Sept. 1958, Psychological and Biological Research Membership, Committees, SSB Papers; and Berkner to Detlev Bronk, 5 Jan. 1962, Reorganization, 1961–1962, SSB Papers. Aside from exobiology and man-in-space research, the life sciences never really found a niche in either NASA or the SSB; see Newell, *Beyond the Atmosphere* (cit. n. 7), pp. 274–282.

[11] Joshua Lederberg to Berkner, 29 Sept. 1959, Lederberg to Hugh Odishaw, 26 Oct. 1959, SSB Correspondence 9–12/59; and Lederberg to Odishaw, 3 Jan. 1961, SSB Committee 16, Bioastronautics 1960 (Life Sciences Committee): Box 28, Joshua Lederberg Papers (hereafter **Lederberg Papers**), National Library of Medicine, Bethesda, Maryland. Since this collection is still being accessioned, box numbers are subject to change. I have cited the boxes as I found them in July 2000 and Oct. 2001. Portions of the Lederberg papers are available on the NLM's Profiles in Science website: http://www.profiles.nlm.nih.gov/BB (hereafter **Profiles in Science**).

[12] Berkner made this argument on several occasions, most notably in an open letter to the President's Special Advisor for Science and Technology, George Kistiakowsky: Berkner to George Kistiakowsky, 13 Nov. 1959, PSAC, SSB Papers.

Research, renamed the Committee on Biological Research, turned its attention to one area in which space offered a truly unique perspective and the possibility of American leadership: exobiology.

No one worked harder than Joshua Lederberg to bring exobiology to the forefront of space policy. His initial involvement grew from fears about irreversible contamination—of both other planets and earth. According to Lederberg's standard origin story of his interest in outer space, he and the British biologist J. B. S. Haldane were dining in Calcutta about a month after the launch of *Sputnik* when Haldane, an avid Marxist, wondered aloud whether the Soviets might plant a "Red Star"—a thermonuclear explosion—on the moon. After debating the feasibility of such a plan, Haldane and Lederberg lamented the potential contamination of the moon's surface in the name of a political demonstration. Soon afterward, Lederberg began campaigning for international agreements and sterilization procedures to protect the moon and other planets from radiation and bacterial contamination. In February 1958, at Lederberg's urging, the Council of the NAS passed a resolution calling for careful planning of experiments "so that initial operations do not compromise and make impossible forever after critical scientific experiments."[13] Lederberg's narrative contains all the hallmarks of a utopian Cold War technoscientific heroic adventure: two scientists of different ideological stripes overcome their differences to offer a technological solution to a political problem.

As a recruiting device, Lederberg's heartfelt concern for protecting outer space proved more compelling than the SSB's mandate to develop concrete plans for space research. His West Coast Committee on Extraterrestrial Life (WESTEX) eventually formed the core of an SSB Committee on Exobiology. WESTEX first met at Stanford in February 1959, at Lederberg's insistence, to address the problem of preserving and protecting planetary surfaces during space exploration. Although an earlier group of scientists (known as EASTEX, for East Coast Committee on Extraterrestrial Life) had met previously in Cambridge, Massachusetts, WESTEX was the more active, holding at least five meetings between 1959 and 1960. With Lederberg's vocal support, this "Group on Planetary Biology" immediately attracted high-profile biologists and chemists, including Melvin Calvin, Roger Stanier, Gunther Stent, Norman Horowitz, A. G. Marr, C. B. van Niel, and Aaron Novick; H. C. Urey and Matthew Meselson soon joined as well.[14]

Unlike EASTEX, whose members focused almost exclusively on scientific questions pertaining to the origin of life, Lederberg had convened WESTEX in response to a problem with special Cold War relevance: contamination. In 1958 the International Council of Scientific Unions Committee on Contamination by Extraterrestrial Exploration (CETEX) had prepared a fact sheet outlining the possibilities of contamination of the lunar atmosphere, Mars, and Venus by rockets, nuclear explosions, or terrestrial organic material. In Lederberg's opinion, however, the accompanying recommendations did not go far enough in protecting the surface and atmosphere of earth and other planets, and WESTEX's most immediate task was to prepare scientific statements for upcoming CETEX meetings.[15]

[13] Lederberg interview (cit. n. 9) (Lederberg recounted the same story in interviews with Susan Lindee and Steven J. Dick and in his personal notes for an autobiography); and "Addendum to Minutes of the Meeting of the Council of the National Academy of Sciences on February 8, 1958," Man in Space, Box 26, Lederberg Papers.

[14] WESTEX Minutes, 21 Feb. 1959, WESTEX Ad hoc, Committees, SSB Papers (most, but not all, WESTEX minutes can be found in this folder); for the names see WESTEX Membership Roster, Oct. 1960, Exobiology, Committees, SSB Papers. For EASTEX records see EASTEX Meetings, Cambridge, 1958, SSB Papers.

[15] "Development of International Efforts to Avoid Contamination of Extraterrestrial Bodies," *Science,* 1958, *128:*887–889.

The desire to protect extraterrestrial surfaces from earthly contamination undoubtedly reflected growing regrets over the effects of nuclear testing and industrial development on the earth's environment, but it also highlighted unanswered questions about the origins of life. Svente Arrhenius's panspermia theory, in particular, demanded an especially cautious approach to the untouched surfaces of other planets. In outlining this early twentieth-century theory for WESTEX members, Norman Horowitz explained, "Life-bearing seeds [i.e., panspermia] are scattered through space, and . . . they fall on the planets and germinate wherever conditions are favorable."[16] In order to detect the "life-bearing seeds," scientists needed to be able to distinguish between man-made particles and unknown substances. The only way to ensure the detection of panspermia or other unfamiliar forms of life would be to keep the surfaces of celestial objects free from man-made contaminants.

The new molecular knowledge in biology, however, rendered panspermia a somewhat suspect theory and hence an unstable base on which to build a program of "scientific validity." Panspermia was one of many theories offering explanations for the origin of life, fitting between Louis Pasteur's investigations into spontaneous generation and contemporary debates among A. I. Oparin, Haldane, Urey, and Stanley Miller on the abiotic synthesis of organic molecules. In light of more modern investigations, Lederberg cautioned WESTEX members against using panspermia to justify stricter space exploration guidelines. Neither embracing nor dismissing the theory, he remarked, "Arrhenius's arguments are not *so* implausible that they should be totally ignored, but I would rather plead our basic ignorance than an explicit mechanism such as panspermia." Rather than dwelling on panspermia, WESTEX and an eventual SSB Committee on Exobiology proposed that the study of extraterrestrial organic molecules or bacterial organisms offered the greatest opportunity for the life sciences in space. The discovery of life on other planets might confirm "the uniqueness of systems based on nucleic acids and proteins as bearers of life." Lederberg, for example, asked whether a planetary fly-by could reveal "the intimate biochemical information in which we are really most interested? Can it tell us the composition of the indigenous amino acids, or whether the amino acids (if any) are D- or L-?" At the forefront of the molecular revolution in biology, Lederberg, Meselson, and their colleagues wondered if they had found the fundamental units of life on all planets—or just on earth.[17]

According to WESTEX, an exobiology that stressed analysis at the level of the molecule could inform scientific debates on evolution, comparative microbiology, and theoretical

[16] Norman Horowitz, "Space Research and the Problem of the Origin of Life," WESTEX 1-e, WESTEX Ad hoc, Committees, SSB Papers. For an explanation of panspermia and other theories of the origin of life (both terrestrial and extraterrestrial) see Harmke Kamminga, "Histories of Theories of the Origin of Life" (Ph.D. thesis, Chelsea College, London Univ., 1981); James E. Strick, *Sparks of Life: Darwinism and the Victorian Debates over Spontaneous Generation* (Cambridge, Mass.: Harvard Univ. Press, 2000); and Dick, *Biological Universe* (cit. n. 2), Ch. 7: "The Origin and Evolution of Life in the Extraterrestrial Context."

[17] "Contamination of a Planetary Surface by Interplanetary Missiles," WESTEX 1-b, WESTEX Ad hoc, Committees, SSB Papers; Horowitz, "Space Research"; and Lederberg, "Working Paper," WESTEX Ad hoc, Committees, SSB Papers. For a discussion of the evolutionary synthesis, the unity of life, and exobiology see Vassiliki Betty Smocovitis, *Unifying Biology: The Evolutionary Synthesis and Evolutionary Biology* (Princeton, N.J.: Princeton Univ. Press, 1996), pp. 172–174. On the history of molecular biology during this time period see Soraya de Chaderevian and Jean-Paul Gaudillière, eds., *The Tools of the Discipline: Biochemists and Molecular Biologists, Journal of the History of Biology,* 1996, *29*(3); Horace Judson, *The Eighth Day of Creation* (New York: Simon & Schuster, 1979); Lily E. Kay, *The Molecular Vision of Life: CalTech, the Rockefeller Foundation, and the Rise of the New Biology* (New York: Oxford Univ. Press, 1993); Kay, *Who Wrote the Book of Life?* (cit. n. 2); Robert Olby, *The Path to the Double Helix* (London: Macmillan, 1974); and Hans-Jörg Rheinberger, *Toward a History of Epistemic Things: Synthesizing Proteins in the Test Tube* (Stanford, Calif.: Stanford Univ. Press, 1997).

biology. The transnational search for the so-called unity of life, as it was unfolding through contemporary experiments in molecular genetics and biochemistry, lent a certain prestige to the field. Lederberg and his colleagues were fairly successful in selling this message of scientific, and therefore national, prestige to the SSB. In 1962 Berkner told the president of the NAS that exobiology (rather than geology, meteorology, or radiation studies) was the most important scientific research program in space.[18] That same year the chairman of the SSB's newly consolidated Committee on Life Sciences proposed a National Institute of Exobiology. "If we all feel as I take it we do—that the question of extraterrestrial life is *the prime scientific goal* in the life science program, and worthy of huge national expenditures, then it is our responsibility to state flatly and strongly we are not doing enough, in the right way, to achieve it." Lederberg and the WESTEX members urged NASA to "set up its own section specifically charged with exobiological research."[19] Would space biology be limited to the support for man-in-space programs, or could it be a science in itself, dedicated to understanding the building blocks of life outside of a terrestrial context? As WESTEX defined the goals of American space missions, man-in-space would actually be the last step of, rather than the prerequisite for, space experimentation. Life science research in and about space would literally provide new worlds for exploration by biophysicists, biochemists, and molecular biologists.

NASA administrators, not surprisingly, did not warmly embrace the exobiologists' plans. One SSB committee chairman feared that scientists and administrators at NASA's Office of Life Science were only giving "lip service to the view that Exobiology issues are the *only* first-rank biological questions at stake." He was right: for NASA, the "life sciences" meant "man-in-space" programs, not just exobiology. This is not to say that NASA completely ruled out funding for exobiology and origin of life studies; on the contrary, NASA soon became the primary sponsor of work in these fields. Joshua Lederberg and the Stanford Biomedical Instrumentation Laboratory, for example, received grants totaling over $500,000 to support the development of instrumentation for exobiology experiments.[20] The complaints of the life science advisors stemmed from their opinion that any investigation into "space physiology" squandered resources on the spectacle of spaceflight instead of the progress of science.

Tensions between the scientific establishment and NASA ran strong across disciplinary divisions in the early space program, but the role of biologists proved particularly contentious.[21] (See Figure 1.) Besides their difficult negotiations for institutional authority within the space policy establishment, the exobiologists faced an uphill battle for scientific legitimacy. Lederberg and his colleagues found themselves in the unusual position of offering a science that sounded remarkably like science fiction as the most valid enterprise of the space program.

[18] Berkner to Bronk, 5 Jan. 1962, Reorganization 1961–1962, SSB Papers. Even so, discussions of space biology filled only one chapter of the SSB's summary of the possibilities of space science. See Lloyd V. Berkner and Hugh Odishaw, *Science in Space* (New York: McGraw-Hill, 1961).

[19] C. S. Pittendrigh to Berkner, 31 Dec. 1961, Berkner Correspondence, Box 13, H. Keffer Hartline Papers, Rockefeller Archives Center, Sleepy Hollow, New York; and "Call for Meeting," 26 Sept. 1959, WESTEX Ad hoc, Committees, SSB Papers.

[20] Pittendrigh to Berkner, 31 Dec. 1961; "Grant Establishes Biomedical Instrumentation Laboratory," *Stanford Medical Center Memo,* 10 Oct. 1962, p. 1; and NASA "Biomedical Instrumentation Lab" newsletter, 1962, Box 28, Lederberg Papers. See also James Strick, "NASA, the Cold War, and the 'Nucleic Acid Monopoly': Sidney Fox, Stanley Miller, and Origin of Life Research, 1953–1972," paper presented at the History of Science Society annual meeting, Pittsburgh, Nov. 1999.

[21] In his memoirs, T. Keith Glennan, NASA's first administrator, dismisses the SSB as an advisory group, commenting that the "board had a strong urge to run the program": J. D. Hunley, ed., *The Birth of NASA: The Diary of T. Keith Glennan* (Washington, D.C.: NASA, 1993), p. 30.

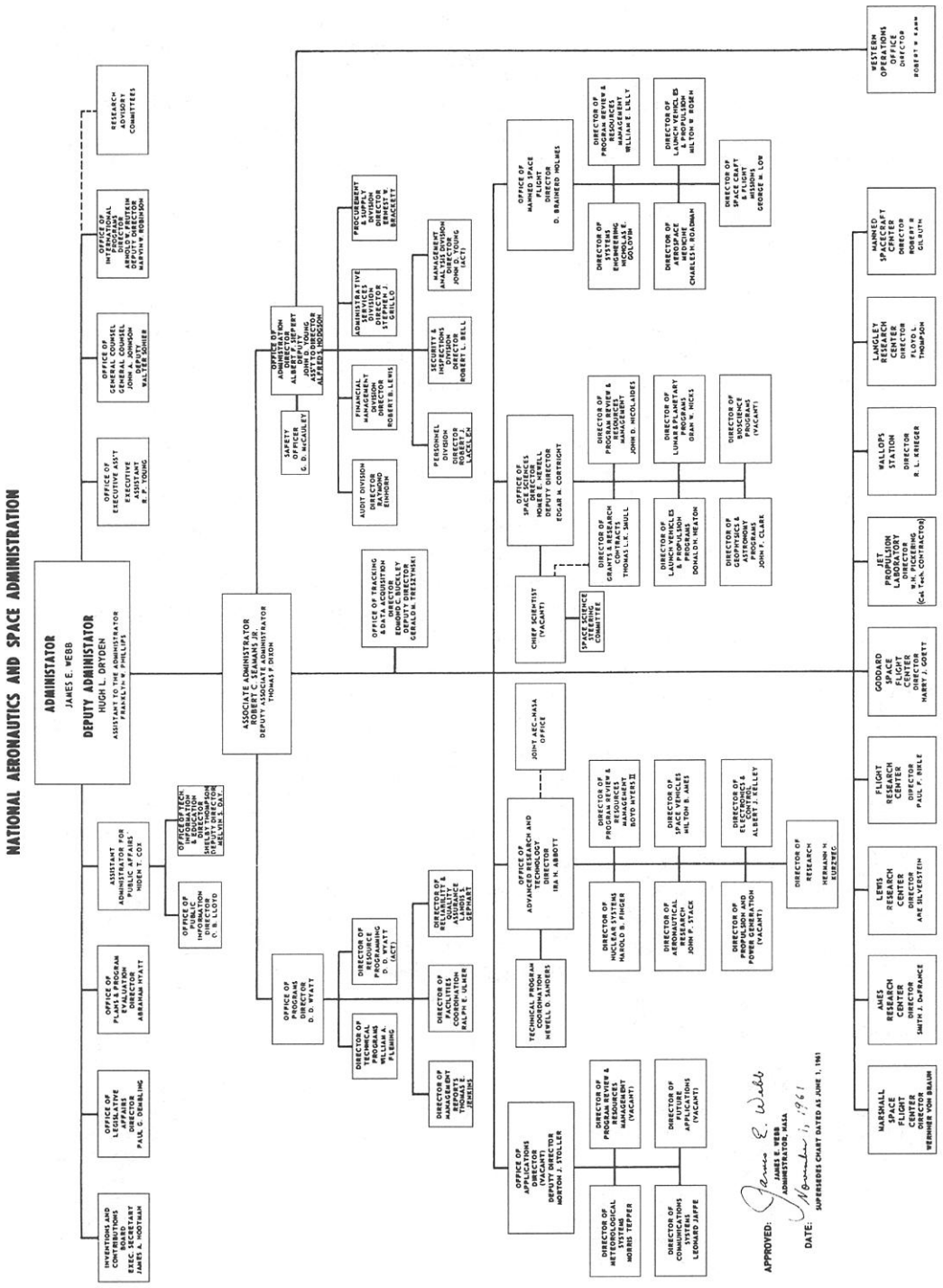

Figure 1. *NASA's tangled organizational structure left little room for life science advisors. SSB Correspondence 9–12/61, Box 28, Lederberg Papers.*

SCIENCE OR SCIENCE FICTION?

While Lederberg and his WESTEX colleagues marshaled evidence for extraterrestrial life in their internal discussions, they constantly worried that the public might misunderstand exobiology as the search for intelligent life on other planets. Exobiology required the support of both the scientific community and the general public if it were to become a scientific research program of "intrinsic merit," and explicit comparisons to science fiction threatened that support. In scientific journals, exobiology's supporters positioned it as an investigation into the origins of life, a means of directly observing the processes of cosmochemistry and molecular evolution.[22] Occasional articles in the mass media integrated the scientists' pronouncements into cultural narratives of alien invasion while simultaneously deferring to the scientists' authority. Its scientific detractors, on the other hand, described exobiology in the same breath as science fiction and rhetorically linked exobiology to the study of intelligent extraterrestrial life. According to these detractors, exobiology veered dangerously close to the popular fixation on little green men. Lederberg recognized this threat and attempted to police the border between what he saw as the legitimate science of exobiology and its popularizations and "misrepresentations."

Lederberg originally presented exobiology as a problem of contamination. "Contamination," as he described it, posed two very different threats. First, as CETEX recognized, the surfaces of other planets had to be protected from biological, chemical, and radiological damage from terrestrial exploration. More troubling for earthlings, however, was the prospect of "back contamination"—the possibility that unfamiliar extraterrestrial viruses or bacteria might be brought to earth. Manned return missions, meant to delight and inspire, might instead create new forms of pestilence and annihilation—a theme later explored in Michael Crichton's *Andromeda Strain* (1969).[23]

WESTEX invoked standard tropes—"the rabbit in Australia, smallpox in America, Treponema in Europe"—to help their audiences and themselves imagine the social, economic, and political dangers of unchecked space exploration. They were careful to avoid mention, however, of the most obvious referents for their concerns: H. G. Wells's *The War of the Worlds* (1898) and Ray Bradbury's *The Martian Chronicles* (1950). Although separated by time and place, both authors addressed themes that resonated with American Cold War audiences. In *The War of the Worlds,* Martian invaders destroy much of London and the English countryside before falling victim to terrestrial bacteria. Along with evil Martians, their spacecraft carries an invasive red weed that eventually succumbs to common plant diseases unknown on Mars. When Orson Welles adapted the book for his notorious panic-inspiring radio broadcast in 1938, he changed the location of the invasion to Grover Mills, New Jersey, but otherwise followed Wells's original story. Over six million Americans are estimated to have heard Welles's production; of these, almost a third apparently thought it was true.[24]

[22] Joshua Lederberg, "Moondust," *Science,* 1958, *127:*1473–1475; Lederberg, "Exobiology: Approaches to Life beyond the Earth," *ibid.,* 1960, *132:*393–400; Edward Anders, "The Moon as Collector of Biological Material," *ibid.,* 1961, *133:*1115–1116; and Lederberg and Carl Sagan, "Microenvironments for Life on Mars," *Proceedings of the National Academy of Sciences,* 1962, *48:*1473–1475. These articles all reflect discussions at WESTEX meetings, as can be surmised both from their acknowledgments and from the texts themselves.

[23] Michael Crichton, *The Andromeda Strain* (New York: Knopf, 1969).

[24] H. G. Wells, *The War of the Worlds* (London, 1898); and Ray Bradbury, *The Martian Chronicles* (Garden City, N.Y.: Doubleday, 1958). For the figures see Brian Holmsten and Alex Lubertozzi, eds., *The Complete War of the Worlds: Mars' Invasion of Earth from H. G. Wells to Orson Welles* (Naperville, Ill.: Sourcebooks Media Fusion, 2001), p. 6. One example of the "standard tropes," which appear often in WESTEX papers, can be found in Joshua Lederberg, "Working Paper, March 10, 1959," WESTEX 2-a, Request for Support, Proposals 1958–1959, SSB Papers.

Though Bradbury's *The Martian Chronicles* had a less dramatic impact on the general population, it seems to have deeply affected Lederberg and his WESTEX colleagues. The novel portrays the American colonization of Mars at the beginning of the twenty-first century. Suspicious Martians outwit the first three expeditions; the fourth succeeds only because the vast majority of the Martian population has died from what appears to be chicken pox. The vulgar Americans stay on Mars just long enough to destroy the beautiful remnants of Martian civilization before returning home to destroy themselves through nuclear war. Though WESTEX documents mention neither of these books explicitly, the themes of unintended consequences and self-annihilation echo throughout their discussions. Aaron Novick, a nuclear scientist turned biophysicist, for example, warned that the possibility of back contamination might require society to place restrictions on both scientific research and manned spaceflight, "if only to protect its own welfare." WESTEX officially recommended a "vehement policy of exclusion" for returning spacecraft "until we can be sure that the welfare of the human species is secure from one of the few kinds of threat full [*sic*] within our capacity to avert."[25]

In light of these novels, as well as contemporary films, exobiology certainly sounded like science fiction. Newspaper reporters, especially, emphasized these links to add interest and drama to their stories. The general public learned about exobiology from articles in popular magazines such as *Time, Newsweek,* and *Esquire* in addition to reports in national newspapers such as the *New York Times.* The *Times,* for instance, followed the CETEX story and later reported Soviet efforts to sterilize their lunar shot. While these articles on the potential loss of research opportunities rarely strayed from scientific reports, the SSB's 1960 warnings on the problem of "back contamination" inspired more speculative pieces. A *New York Times* photograph of Lederberg captioned "WARNS ON GERMS" accompanied a relatively restrained article that mentioned the "'extremely doubtful possibility' that the micro-organisms of other planets would introduce a new disease on earth." Other newspapers, however, grabbed attention with headlines such as "Invasion from Mars? Microbes!" and "Space Academy Board Warns of Microbe Attack from Space." Such leads as "A 'war of the worlds' is now conceivable" plagued Lederberg's attempts to establish the legitimacy of his new science.[26]

Lederberg's fascination with extraterrestrial bacteria and disease elicited international attention. A cartoon in an unidentified Danish newsmagazine, for example, shows three hospitalized patients suffering from "Måne Mæslinger" (moon measles), "Marts Influenza" (Mars flu), and "Venus Vorter" (Venus warts). A "Stjerne syge" (Saturn sage) grows on the windowsill. The text itself removes any lingering doubts as to the cartoon's inspiration, referring to Lederberg in the headline and opening with a direct allusion to *The War of the Worlds.*[27]

If headlines and cartoons threatened to undermine the scientific legitimacy of exobiology, the texts themselves generally combined the narrative techniques of scientific authority with science fiction. Two articles that appeared in *Time,* one in 1961 and the other

[25] WESTEX 5-c, Paraphrase of Communication from Aaron Novick, 19 Feb. 1959; and Joshua Lederberg, draft, "Aims of Space Exploration," 20 Feb. 1960, WESTEX 5-d: WESTEX Ad hoc, Committees, SSB Papers.

[26] "Danger from Space?" *Time,* 17 Nov. 1961, p. 76; "Life Detector," *ibid.,* 30 Aug. 1963, p. 52; "Life Detectors," *Newsweek,* 30 Sept. 1963, p. 56; "Somebody Up There Like Us?" *Esquire,* Dec. 1963, pp. 185–187; *New York Times,* 6 July 1958, 30 Sept. 1958, 4 Sept. 1959, 14 Sept. 1959, 4 May 1960, 3 May 1960 ("'extremely doubtful possibility'"); *Los Angeles Examiner,* 20 Mar. 1960; and *New York World-Telegram and Sun,* 4 May 1960.

[27] "Influenza fra universet," unlabeled magazine clipping dated 24 June 1960, Box 26, Lederberg Papers.

in 1963, for example, began by conjuring the specter of aliens and then revealing the real microbiological or molecular science (and scientists) behind the projects. In 1961, for example, the author of "Danger from Space" wrote that

> the human species seems about to master the solar system. The contrary may be true. . . . The invaders most to be feared will not be little green Venusians riding in flying saucers or any of the other intelligent monsters imagined by science fictioneers. Less spectacular but more insidious, the invaders may be alien microorganisms riding unnoticed on homebound, earth-built spacecrafts. If they can thrive and multiply on terrestrial organic matter, it is probable that no earthly creature, including man, will be safe from their attack.

The article followed the vivid description with a discussion of how Lederberg and his colleagues planned to avert such danger with sterilized spacecraft and microscopic cameras. Two years later, "Life Detector" began with similar language. The news brief describing the purpose of the "multivator," a device meant to land on Mars and test for the presence of the enzyme phosphatase, opened: "Some time in 1966, . . . a strange device the size of a milk bottle will plop onto the dry crust of Mars, set itself up on three self-adjusting legs, and begin a search for life. The detector will not be looking for bug-eyed monsters or giant, exotic plants. It will be satisfied with nothing more than a faint fluorescent glow in its own compact innards." (See Figure 2.) Following this exotic introduction, the article went on to describe the scientific processes that would produce the telling glow.[28]

Both of these articles abide by the unspoken rules of postwar science writing: lead with something outrageous or bizarre, then explain how the wonders of science have produced such a novelty, preferably with reference to the scientific credentials of the protagonists. Lederberg is introduced as "Stanford University's Nobel-winning geneticist" or "the famed Nobel Prize–winning geneticist Joshua Lederberg, 32, of Stanford." Both articles notably attempt to describe the biological processes and chemical reactions necessary for the experiments' success. A few technical terms—"amino acids," "phosphatase enzymes," "protozoa"—are conveniently tossed into the story, along with more familiar domestic metaphors. A lunar detector is described as a "mechanical anteater with a sticky tongue for picking up lunar dust," the multivator as a "miniature vacuum cleaner [that] will suck dust into a thin-lipped opening in the multivater's base."[29]

At the same time that these popular narratives fed the public's appetite for space exploration stories, they also served to legitimate those scientists advocating exobiology, Lederberg in particular. Criticisms of exobiology as science fiction were defused by linking the proposed solutions to the problems these articles described to a Nobelist and the techniques of molecular genetics. While bacteria and viruses—and by extension the new molecular genetics that used them as tools—were initially portrayed as terrifying invaders, the articles emphasized that the scientists who studied them could harness their scientific and technological abilities to decode (through phosphatase, for example) the extraterrestrial world and protect against alien invasion. Fear therefore both sanctioned the study of exobiology and marked it as the disciplinary territory of biochemical genetics.

These and similar narratives placed exobiology within the larger political metanarrative

[28] "Danger from Space?" (cit. n. 26), p. 76; and "Life Detector" (cit. n. 26), p. 52.

[29] "Danger from Space?" p. 76; and "Life Detector," p. 52. For the classic study of the culture of science writing see Dorothy Nelkin, *Selling Science: How the Press Covers Science and Technology* (New York: Freeman, 1987).

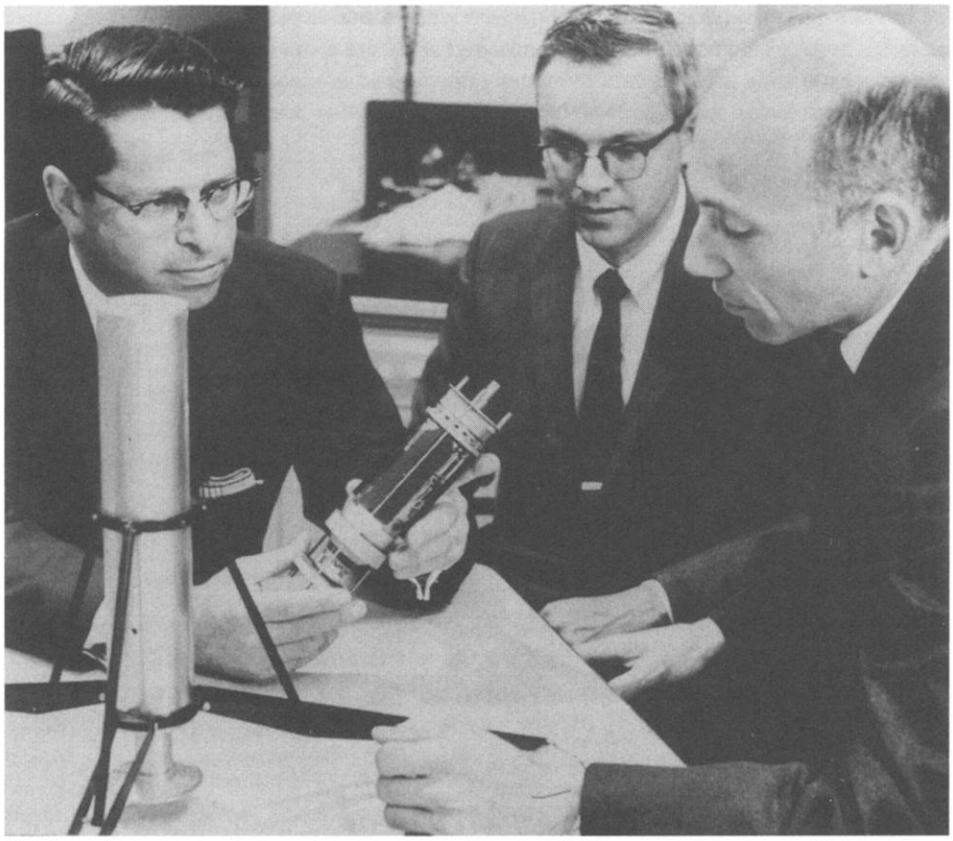

Figure 2. *The geneticist Joshua Lederberg, the physicist Elliott Leventhal, and the electrical engineer Lee Hundley display the multivator—a microbiological detection device designed to fit into the Mariner payload. Reproduced from the* Stanford Medical Center Memo, *25 Sept. 1963, 5(14), with the permission of the Stanford University Libraries.*

of the Cold War. The American duty to protect freedom, through interplanetary settlement if necessary, might be challenged by invisible internal enemies. Personifying the military-industrial-academic complex, scientists such as Lederberg worked with the NRC's Bio-Astronautics Committee, Lockheed Aircraft Corporation, NASA, and the NAS to design a space probe that could protect Americans and other planets from contamination. As with nuclear warfare, prevention was the key; as "Danger from Space?" noted, "It will be impossible to sterilize the men themselves." In a Cold War gender system emphasizing technological masculinity and domestic femininity, domestic technologies such as "lunar vacuum cleaners" promised to protect Americans from alien contamination in space as well as contain Communism at home.[30]

[30] "Danger from Space?" p. 76. Foreign and internal Cold War anxieties played a crucial role in the construction of the domestic ideal of the 1950s and 1960s. See Elaine Tyler May, *Homeward Bound: American Families in the Cold War Era* (New York: Basic, 1988). For a discussion of the curious intersection of domestic gender roles and space travel on television see Lynn Spigel, "From Domestic Space to Outer Space: The 1960s Fantastic Family Sitcom," in *Close Encounters: Film, Feminism, and Science Fiction,* ed. Constance Penley, Elisabeth Lyon, Spigel, and Janet Bergstrom (Minneapolis: Univ. Minnesota Press, 1991), pp. 205–235.

Refusing to acknowledge the similarity between the real possibility of extraterrestrial bacterial invasion and the scenarios portrayed in science fiction, Lederberg referred to accounts, especially in the popular press, that drew such parallels as "inventive." Lederberg himself occasionally spoke directly to the public about NASA's decontamination plans in popular venues such as *Senior Scholastic* and, later, his *Washington Post* columns.[31] At the request of Hugh Odishaw, the executive director of the SSB, Lederberg also taped a lecture on exobiology for distribution over the United States Information Agency's Voice of America radio network. Lederberg's lecture appeared in a "Forum Series on Space Science and Exploration" meant to explain the scientific aspects of space exploration. Other speakers, including J. A. Van Allen, C. S. Pittendrigh, and Christopher Lambertson, represented the SSB's other interests. Odishaw urged Lederberg to participate on the grounds that the series was not "mere popularization" but, rather, a "serious scientific" endeavor. NASA's public education programs, with their focus on manned spaceflight, may have convinced Lederberg to participate.[32] Rather than countering either the space travel fantasies or the comparisons to science fiction, however, Lederberg simply ignored them in his own comments to the public.

Even though Lederberg expressed annoyance at the mass media's comparisons of his work to popular culture, the narratives used in such accounts enabled the life scientists to make a positive contribution to national needs, ensuring that their call to protect innocent planets and earthlings from reckless Communist celestial exploration would not go unheeded. Among some quarters of the scientific community, however, the exobiologists' belief in the possible extraterrestrial origin of life raised eyebrows. WESTEX members attempted to defuse this problem by stressing their interest in organic compounds, amino acids, or possibly bacteria—not cognitive beings. They also chose to call their discipline "exobiology" rather than "xenobiology," a suggestion by a science fiction writer. In the process of discipline building, however, exobiology grew beyond Lederberg's control. Although the history of Search for Extra-Terrestrial Intelligence, or SETI, programs is beyond the scope of this essay, their growth and subsequent association with exobiology proved crucial for how other scientists, especially evolutionary biologists, perceived the discipline.[33] Astronomers with an interest in exobiology, such as the outspoken Carl Sagan, provided easy targets for those, like G. G. Simpson, who resented the prevalence of the "new biology" in the space program. When Simpson blasted the philosophical and scientific basis of exobiology, he did so by drawing discursive links between exobiology and science fiction.

Simpson's 1964 *Science* article, "The Nonprevalence of Humanoids," brilliantly sub-

[31] WESTEX Memo, 26 Jan. 1960, WESTEX Ad hoc, Committees, SSB Papers; Joshua Lederberg, "Plague from Planets," *Senior Scholastic,* 17 Feb. 1960, p. 22; and Lederberg, "Are There Bugs on Mars?" *Washington Post,* 26 Feb. 1967. Lederberg served as a weekly columnist for the *Washington Post* between 1966 and 1972.

[32] Odishaw to Lederberg, 22 June 1961, SSB Correspondence 6–8/61, Box 28, Lederberg Papers. In 1960 Horowitz wrote Lederberg an outraged letter describing a television program he had seen on NBC. The documentary featured Glennan, as well as other NASA officials, and emphasized man-in-space. According to Horowitz, this "very foolish and harmful program" ignored all aspects of space science "except, of course, the possibility of communicating with intelligent beings on other planets. . . . The possibility of detecting non-intelligent life was not mentioned, naturally." Norman Horowitz to Lederberg, 16 May 1960, Profiles in Science. He continued his description a few days later, additionally arguing that the program offered an opportunity for the SSB to pressure Glennan into placing more emphasis on actual science. Horowitz to Lederberg, 19 May 1960, Profiles in Science.

[33] "Xenobiology" is suggested in Harold Wooster, Letter, *Science,* 1961, *134:*223–225. Dick's *Biological Universe* (cit. n. 2) contains an extensive discussion of the history of SETI programs (pp. 414–454). See also I. S. Shklovskii and Carl Sagan, *Intelligent Life in the Universe,* trans. Paula Fern (New York: Dell, 1966).

verted the narrative strategies adopted by the exobiologists and the science writers who supported them. Simpson, like the writers for *Time,* opened by invoking the prospect of intelligent life on other planets and then moved on to the scientific principles underlying the exobiology research program. Unlike those mass media science writers, however, Simpson maintained this link rather than dismantling it. In one paragraph, for example, he mentioned discarded theories about canals made by intelligent Martians along with new theories suggesting vegetation as an explanation for the dark areas on Mars. Simpson reminded the reader that no evidence of life on other planets had yet been found, "in spite of reports of flying saucers and little green men, which belong only in science fiction." He continued, "Unless we know or can seriously hope to learn in fact of other humanoids, the dream remains a dream, a fantasy, a science-fiction *divertissement,* a poetic consolation with no substance of reality." Simpson's oft-quoted description of exobiologists as "ex-biologists" did more than exclude exobiologists from science; it also implied that the physical and chemical techniques favored by molecular biologists, biochemists, and biophysicists should not be considered biological work (a point he made explicit elsewhere by defining their interests as "not biology, strictly speaking").[34]

Ironically, at the same time that Simpson's analysis undermined the legitimacy of exobiology, his criticisms inadvertently excused the discipline from accusations of political intrigue. By focusing on exobiologists' penchant for the imaginary, Simpson "safely" defused exobiology as harmless—if expensive—science fiction rather than a manifestation of Cold War technoscience. Simpson's problem with Lederberg's exobiology was its reductionist approach to life, its search for D- or L-amino acids, not its contribution to the presumed national interest. He made this abundantly clear in his conclusion, in which he suggested that NASA might more fruitfully spend its money on "systematics and evolution of earthly organisms" rather than looking for life in outer space.[35]

The SSB's life scientists had attempted to control the image of exobiology by carefully monitoring press coverage of their words. The belief that "accurate" coverage of science would eliminate references to the "alien," however, was unrealistic in an era obsessed with foreign invasion, whether from the Soviet Union or outer space. Science fiction films such as *Invasion of the Body Snatchers* and *Them!* primed the American public to make complex links between microbes, extraterrestrials, and Communist invasion. In terms of its narrative appeal, exobiology culminated a decade of speculation on the difficulty of identifying the aliens in our midst. What the general public did not realize, however, was that underneath the science fiction drama of extraterrestrial life debates lay actual political intrigue.

SCIENTIFIC INTELLIGENCE: EXOBIOLOGY AS FOREIGN POLICY

The close of the Cold War, and the gradual declassification of documents, has presented historians with opportunities to reinterpret the role of science and technology in foreign policy. Scientific cooperation programs, whether initiated by governments or by the scientists themselves, could open communication channels between nations in conflict. Occasionally, as with the International Institute for Applied Systems Analysis, such programs actually did foster openness and creativity.[36] More often, however, transnational initiatives

[34] George Gaylord Simpson, "The Nonprevalence of Humanoids," *Science,* 1964, *143:*769–775.

[35] *Ibid.,* p. 775.

[36] On scientific cooperation programs in general see Alexander Keynan, "The Political Impact of Scientific Cooperation on Nations in Conflict: An Overview," in *Scientific Cooperation, State Conflict: The Roles of Scientists in Mitigating International Discord,* ed. Allison L. C. De Cerreño and Keynan (*Annals of the New*

such as the IGY provided cover for secret plans to gather scientific intelligence or circumvent international law. Ronald Doel's extensive research in the Eisenhower and Truman archives hints at the extent of "science in black"—"the large, unexplored continent of interconnections, maintained in secrecy, between scientists and public officials mutually interested in adopting science to serve U.S. interests and the national security state."[37] With a few exceptions, however, historians of American science have proved reluctant to pursue these hidden stories, preferring instead to view Cold War science and technology through domestic demands for military or economic production. Secret connections are, by definition, difficult to prove, but their slipperiness does not make them any less real. Sometimes, as in the case of exobiology, even the participants may not have realized the potentially secret uses of their knowledge.

The strategic choice of Lloyd Berkner as chair of the SSB provided the organization with clear ties to both the international scientific community and the State Department. The scientific community recognized Berkner as a manager with broad ties to the government and civilian agencies. International scientific cooperative efforts were his specialty; he had initiated and played a major role in the IGY. Berkner worked closely with the State Department after World War II, and in 1950 his report on the role of science in foreign affairs established the American understanding of scientific cooperation during the Cold War. Though Berkner presented the report to the scientific community as an opportunity to ease mechanisms for international scientific exchange, Allan Needell has shown that its published version merely served as an introduction for a classified appendix that recommended the cultivation of informal contacts between American, European, and possibly even Soviet scientists as the most effective way to gather scientific intelligence. Most important for the SSB and the civilian space program, Berkner and the State Department agreed that such programs would be most successful if the civilian scientists, debriefed by other scientists with higher security clearances, remained unaware of the possible nationalistic uses of their information.[38] From this perspective, the SSB's mandate to facilitate international cooperation in the name of peaceful exploration of space suggests a more complicated role for the civilian scientist policy advisors. With or without their knowledge, committee members would be treated as resources for evaluating the ability of Soviet scientists to design sterilization and microbiological detection devices.

A successful program in exobiology offered a number of benefits, both practical and symbolic, to U.S. competitiveness. Even though Soviet genetics continued to suffer under

---

York Academy of Sciences, 866) (New York: New York Academy of Sciences, 1998), pp. 1–54. The Pugwash Conferences exemplify this practice. See Joseph Rotblat, *Scientists and the Quest for Peace: A History of the Pugwash Conferences* (Cambridge, Mass.: MIT Press, 1972), for an official history; for a post–Cold War study of the practices of Pugwash in the case of biological and chemical warfare see J. P. Perry Robinson, "The Impact of Pugwash on the Debates over Chemical and Biological Weapons," in *Scientific Cooperation, State Conflict,* ed. De Cerreño and Keynan, pp. 224–252. On a successful initiative see Alan McDonald, "Scientific Cooperation as a Bridge across the Cold War Divide: The Case of the International Institute for Applied Systems Analysis (IIASA)," *ibid.,* pp. 55–83.

[37] Doel, "Scientists as Policymakers" (cit. n. 4), p. 216. The International Geophysical Year was a nominally international effort to further upper atmospheric research, including the launching of satellites. Though they should be regarded as primary rather than secondary sources, basic histories of the IGY can be found in Sydney Chapman, *IGY: Year of Discovery* (Ann Arbor: Univ. Michigan Press, 1959); and Walter Sullivan, *Assault on the Unknown: The International Geophysical Year* (New York: McGraw Hill, 1961). Needell offers a sophisticated view of the project in *Science, Cold War, and the American State* (cit. n. 3), Ch. 11: "Berkner and the IGY," pp. 297–323. McDougall explores the implications for international law in *Heavens and the Earth* (cit. n. 1).

[38] Lloyd Berkner, *Science and Foreign Relations: International Flow of Scientific and Technological Information,* Publication No. 3860 (Washington, D.C.: Department of State, May 1950); and Needell, *Science, Cold War, and the American State,* pp. 144–148. Needell successfully requested the declassification of this document.

Lysenko, one of the leading contemporary theories for the origin of life had been conceived by the high-ranking Soviet academician A. I. Oparin. Symbolically, demonstrating American biological expertise in the molecular theories and techniques proposed by Lederberg and his colleagues would directly contrast Anglo-American achievements in molecular biology to the stunted development of genetics in the Soviet Union and would counter Oparin's success.[39] A successful program in exobiology furthermore required international cooperation, which would demonstrate the American commitment to peaceful uses of space. More practically, exobiology had direct implications for the development of biological weapons. Both scholarly investigations and the anthrax scares of 2001 and 2002 have revealed the extent of the American military's interest in offensive and defensive biological weapons throughout most of the Cold War.[40] Clearly, the nation had an interest in whatever unique microbes might be discovered on the surfaces of other planets, whether to protect earthlings from "back contamination" or to use the new organisms for darker purposes.

The tension between international cooperation and military secrets presented special problems for exobiologists. The life scientists' desire to appear distinct from military and political concerns took administrative form in continual renegotiation between the SSB, the NRC–Armed Forces Committee on Bioastronautics, and NASA's Office of Life Sciences. The Committee on Bioastronautics was largely composed of military advisors and a few practicing scientists, including the University of California chemist Melvin Calvin (who also served on the SSB's Committee 11). Although this committee had originally been created to discuss specific technical problems in space exploration, by its second meeting in 1959 it too focused on the problem of extraterrestrial life. Paralleling executive attempts to eliminate duplication between the military and civilian branches of the space program, the leaders of the NAS quite logically attempted to combine the two committees to enable the academy to "speak with one voice." Lederberg and his colleagues vigorously opposed this plan, arguing that the NAS was a committee of civilians advising civilians while the Committee on Bioastronautics included military men addressing military matters. Moreover, Lederberg argued, giving exobiologists security clearances might hinder their pursuit of international cooperation.[41]

[39] See note 17, above, for histories of molecular biology. The classic accounts of Lysenkoism were written by Soviet scientists deeply mired in the conflict. See David Joravsky, *The Lysenko Affair* (Cambridge, Mass.: Harvard Univ. Press, 1970); Zhores A. Medvedev, *The Rise and Fall of T. D. Lysenko,* trans. I. Michael Lerner (New York: Columbia Univ. Press, 1969); and Valery N. Soyfer, *Lysenko and the Tragedy of Soviet Science,* trans. Leo Gruliow and Rebecca Gruliow (New Brunswick, N.J.: Rutgers Univ. Press, 1994). Nikolai Krementsov approaches the topic with more historical distance and sophistication in *Stalinist Science* (Princeton, N.J.: Princeton Univ. Press, 1997). Soviet genetics in the 1950s and 1960s was not nearly as barren as most Americans thought it to be. Institutions that camouflaged their research under other names were particularly successful in harboring researchers in molecular biology and genetics. See Mark B. Adams, "Genetics and the Soviet Scientific Community, 1948–1965" (Ph.D. diss., Harvard Univ., 1972).

[40] Many of these projects are currently in process and remain unpublished as yet. Gerard Fitzgerald's dissertation research has thus far provided the most evidence of an extensive program of offensive biological weapons development within the universities. Initial reports include Gerard Fitzgerald, "Mechanization through Standardization: Bacteriological Engineers and Biological Weapons at LOBUND, 1928–1955," paper presented at the History of Science Society annual meeting, Vancouver, 3 Nov. 2000; and Fitzgerald, "In the Shadow of the Atom: United States Biological Weapons Research, 1940–1955," paper presented at "Cold War Science, Technology, and Medicine: Global Perspectives Conference," 10 Nov. 2000, Philadelphia.

[41] *Bioastronotes Newsletter,* nos. 1–3, Bioastronotes, AF/NRC Committee on Bioastronautics, NAS Archives; and Lederberg to George Derbyshire, 29 Mar. 1960, Relationships, AF/NRC Committee on Bioastronautics, SSB Papers. Calvin unfortunately does not discuss his membership on the Committee on Bioastronautics in his autobiography: Melvin Calvin, *Following the Trail of Light: A Scientific Odyssey* (Washington, D.C.: American Chemical Society, 1992). For the most complete discussion of the relationship between the military and civilian branches of the space program, including references to recently declassified documents, see Mark A. Erickson,

Since interplanetary contamination perpetrated by any nation would deprive all future scientists of research opportunities, the success of exobiology depended on actual, rather than merely symbolic, international cooperation. In spite of their attempts to arrange international exchanges of biological knowledge, however, American exobiologists faced a dearth of information from the Soviet Union. What they did know was gleaned from personal contacts, secondhand gossip, and newspaper translations. In September 1959 the Soviets announced that their lunar probe, *Luna II,* had crashed into the moon's surface. Among WESTEX members, the most immediate question was the efficacy of the Soviets' secret sterilization process. Eugene Kinkead of the *New Yorker* magazine sent Lederberg a translation from *Pravda* that offered the Soviet rationale for sterilization (the preservation of future research opportunities) but hedged on actual techniques. The article merely referred to the opinions of the academician N. D. Ierusalimskii and the "powerful chemical and physical means" available to Soviet scientists. Carl Sagan reported a similar exchange in his conversation with G. F. Gause of the Soviet Academy of Medical Sciences at the Darwin Centennial Celebration in November 1959. Gause assured Sagan that all parts of *Luna II* had been properly sterilized.

> But when I pressed him for details, he claimed that his knowledge of the sterilization did not exceed that published in *Izvestia.* He said that the sterilization methods were those known to every graduate student in microbiology at the University of Chicago, and to every manufacturer of canned food, but he would not be more specific than that. He explained his reluctance by the analogy that Abbott Laboratories in Chicago would not divulge trade secrets to competing pharmaceutical firms; he shrugged off my objection that this was not a case for competition but for cooperation. . . . On all topics unrelated to probe sterilization Gause was most affable.

Nor, according to Lederberg, had "Washington" been able to learn about the details of the Soviet decontamination procedure. Both Lederberg and Novick realized that their personal connections to Soviet scientists might offer a better chance of success, and Lederberg decided to write directly to Ierusalimskii.[42]

For Lederberg, the high stakes justified overtures that others viewed as possible breaches in security. Perhaps wanting to offer a quid quo pro, Lederberg requested permission to send Ierusalimskii copies of WESTEX committee meeting minutes. Not surprisingly, Hugh Odishaw, the SSB executive director, "strongly counsel[ed] against" sending the materials, chiding Lederberg, "It does not seem appropriate for us to send the minutes of WESTEX meetings to the Soviet Union providing, as they do, the most advanced thinking of our senior scientists with regard to the many biological questions." Referring to the Soviets' uncooperativeness in this area, the SSB secretariat, George Derbyshire, suggested that Lederberg send only previously published materials instead. This was not Lederberg's only correspondence with Soviet scientists interested in exobiology. Writing "only as a scientist, and not as an official representative," he warned the Soviet microbiologist V. D. Timakov that "the interests of U.S. biologists in this question will be futile unless we can

"The Evolution of the NASA-DoD Relationship from Sputnik to the Lunar Landing" (Ph.D. diss., George Washington Univ., 1997).

[42] "Sterility of the Cosmic Rocket," translation from 15 Sept. 1959 issue of *Pravda,* WESTEX 4/17 1959, Box 26, Lederberg Papers (Lederberg circulated this translation to WESTEX members shortly after he received it from Kinkead, 27 Nov. 1959); "Abstract of letter from Carl Sagan summarizing conversation with G. F. Gause (11/59)," WESTEX 4/18 1959, Box 26, Lederberg Papers; and Lederberg to Novick, 3 Nov. 1959, Novick to Lederberg, 10 Nov. 1959, Lederberg to Novick, 27 Nov. 1959: Profiles in Science.

make a common cause with our fellow-scientists in the biological sciences in the U.S.S.R." Although it is unclear whether the life scientists knew of the State Department's attempts to gather scientific information through meetings and information contacts, they repeatedly tried to incorporate Soviet scientists into exobiology meetings. In another case, Lederberg obtained security clearance for A. A. Imshenetski, the director of the Institute of Microbiology of the Soviet Academy of Sciences, to visit restricted areas in California. Lederberg arranged a lunch meeting at Stanford for himself, Imshenetski, Roger Stanier, and C. B. Van Neil and immediately reported the results of the visit to Derbyshire. He expressed surprise at the Soviet Union's lack of progress in exobiology—but then suggested that perhaps Imshenetski either did not understand the language or pretended not to in order to evade his questions.[43]

The SSB's suggestions for mechanisms of space probe sterilization offer a marked contrast to their calls for international scientific cooperation. From early in 1959 the SSB strongly recommended that NASA contract with the Army Biological Warfare Laboratories at Fort Detrick, Maryland, to design both sterilization procedures and extraterrestrial microbiological detection devices, noting that researchers at Fort Detrick were "superbly equipped both in experience and facilities for this type of work." WESTEX specifically recommended that NASA contract with Fort Detrick, rather than General Electric, for the design of either radiation or ethylene oxide sterilization procedures. (See Figure 3.) Although there was a certain logic to this plan—who better than a biological weapons research facility to design an apparatus to detect minute quantities of foreign bacteria?—it was hardly in keeping with the life scientists' repeated demands for international cooperation. The classified results of such research would be unavailable to Soviet colleagues as well as the American public. Keenly aware of the need for public support, Lederberg admonished a colleague, "But don't let the papers learn you have BW in on the rockets!"[44]

Lederberg's correspondence with Charles Phillips of the Biological Warfare Laborato-

[43] For Lederberg's attempts to send WESTEX minutes to Ierusalimskii see Lederberg to Derbyshire, 23 Nov. 1959; for the response see Derbyshire (SSB Secretariat) to Lederberg, 12 Dec. 1959 (Derbyshire conveyed Odishaw's opinion through this letter): SSB Correspondence 9–12/59, Box 28, Lederberg Papers. For his letter to Timakov see Lederberg to V. D. Timakov, 16 May 1958, Correspondence, Exobiology, Box 26, Lederberg Papers. An effort to include Soviet scientists in exobiology meetings can be found in WESTEX Call for Meeting, 26 Sept. 1959, WESTEX Ad hoc, Committees, SSB Papers. Lederberg's report on Imshenetski is in Lederberg to Derbyshire, 23 Apr. 1960, WESTEX/NASAX Correspondence 1960, Box 26, Lederberg Papers. Lederberg also inquired whether the Russian [*sic*] delegation would participate in the COSPAR Symposium at Nice, writing, "My (all our) interest in attending was predicated on this": Lederberg to Derbyshire, 23 Nov. 1959, SSB Correspondence 9–12/59, Box 28, Lederberg Papers. See also Lederberg to Derbyshire, 25 Sept. 1961, SSB Correspondence 9–12/61, Box 28, Lederberg Papers, where Lederberg reports on a successful conversation with Academician Sisakyian and suggests that informal, but planned, conferences based on the Pugwash model might offer better opportunities for cooperation in exobiology.

[44] Lederberg to Berkner, 13 July 1959, SSB Correspondence 7–8/59, Box 28, Lederberg Papers; and Lederberg to Bob Jastrow, approx. 21 Feb. 1959, WESTEX 3, Box 26, Lederberg Papers. Lederberg was quite enthusiastic in his recommendation of the Fort Detrick microbiologists, referring to their "unequalled experience in the disinfection area": Lederberg to Berkner, 13 July 1959. See his additional endorsements in Lederberg to Bruno Rossi, 21 Feb. 1959, SSB Correspondence 2/59, and Lederberg to Rossi, 3 Mar. 1959, SSB Correspondence 3/59: Box 28, Lederberg Papers; and Lederberg to Jastrow, approx. 21 Feb. 1959, and Lederberg to Derbyshire, 4 May 1959: WESTEX 3, Box 26, Lederberg Papers. This plan was presented to the public in Charles R. Phillips and Robert K. Hoffman, "Sterilization of Interplanetary Vehicles," *Science*, 1960, *132*:991–995. Note that after Aug. 1959 decontamination was no longer "the most urgent problem": Lederberg to Derbyshire, 12 Aug. 1959, SSB Correspondence 7–8/59, Box 28, Lederberg Papers. In an interview, Lederberg suggested that the CETEX agreements ended the need for further discussion of the decontamination issue. When I asked him whether NASA actually contracted with Fort Detrick to build decontamination devices, Lederberg replied, "I don't remember the outcome. . . . I don't believe that they actually ever participated dramatically in the effort, but I can't be sure about that." Lederberg interview (cit. n. 9).

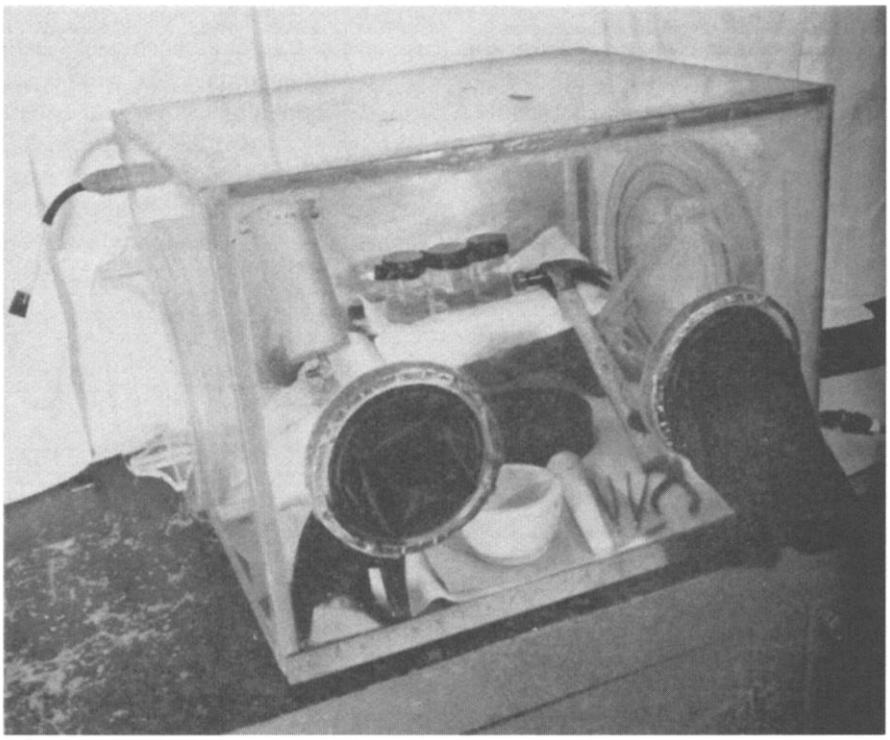

Figure 3. *Researchers at Fort Detrick designed this exposure chamber to isolate and test for bacterial contamination. The microbiological detection device is first externally sterilized by ethylene oxide fumigation (the empty EtO container can be seen at the rear left of the chamber). The researcher could then safely break open the device to test for internal bacterial contamination. The original caption to the photograph indicates that the materials to be tested are obscured by the rubber glove. Reprinted with permission from* Science, *1960,* 132:*994; copyright 1960 American Association for the Advancement of Science.*

ries at Fort Detrick suggests that he had more than a passing familiarity with the experiments conducted and the techniques used at the facility. In responding to a query about possible biological experiments in space, for example, Lederberg commented that Fort Detrick had already conducted studies on the "survivorship of bacteria in chemical explosions," precluding the need for NASA scientists to repeat this work. He and Phillips shared manuscripts, research results, and ideas for early warning detection systems. This was a mutually beneficial arrangement: Lederberg gained informal access to protected information, and Phillips gained the prestige of association with a Nobel laureate. Lederberg made sure to thank Phillips often for the "very many tidbits" sent his way and often restated their shared interests.[45]

No WESTEX member ever suggested on paper that newly discovered bacteria or viruses be used as biological weapons, and their insistence on clear plans for space probe sterilization indicates that most individual members would have stringently opposed such use. The committee's connection to the Army's biological weapons facilities, however, does

[45] Lederberg to John A. O'Keefe, 29 Mar. 1960 (survivorship of bacteria); and Lederberg to Charles R. Phillips, 18 Feb. 1960, 27 May 1960, 29 July 1960, 26 Sept. 1960, 14 Nov. 1960: Profiles in Science.

raise troubling questions. At one point, WESTEX members had demanded a complete quarantine of all space vehicles. Norman Horowitz discouraged this stance, warning his colleagues that overly strict demands for quarantine programs would frighten the public. Although it is difficult to substantiate, the military may have regarded the distinction between sterilization and quarantine as crucial to their own plans. A sterilization agreement that allowed for minute quantities of bacteria on missiles (the less euphemistic term for "space probes") left more room for interpretation than one that demanded complete quarantine of all contaminated materials.[46]

Together, these incidents cast a shadow on exobiology's reputation as a neutral scientific enterprise. On the one hand, Lederberg's invitations to Soviet scientists reveal the naïveté of some civilian scientists and the gulf of political misunderstanding between them and their counterparts in security. The fact that he offered to send high-ranking Soviet scientists internal committee reports on American space science suggests that he actually believed in the SSB's mission of international cooperation even though he encouraged NASA's collaboration with Fort Detrick. When recently pressed about his motivation for reporting on his encounter with Imshenetski, Lederberg simply replied that he assumed it would be his duty to "my country" to report any encounter with a foreign scientist to the proper authorities. No doubt Derbyshire conveyed Lederberg's report to Berkner or some other official; Berkner, for his part, would surely have expected nothing less than Imshenetski's stonewalling from a Soviet scientist under orders from the Central Committee not to report unpublished scientific information.[47] On the American side, however, it is not at all clear that the rest of the WESTEX committee members recognized the potential for military and intelligence interest in their work and their conversations with Soviet scientists. Although the 1959 Antarctic Treaty and the 1963 United Nations "space for peace" principles had established nonmilitary guidelines for space, the Pentagon continued to regard space as a future setting for modern warfare until the United States signed the Outer Space Treaty in 1967.[48]

CONCLUSION

At the beginning of the space program, the American scientists who believed in its potential hoped that space science research would be just as important as technological feats in demonstrating American leadership. As NASA began to have its own success in spaceflight in the early 1960s, however, the SSB members became less sensitive to perceived inferiority. The repeated calls for "sound scientific judgment" and external, "neutral" participation passed out of favor as NASA's internal scientific offices came into their own. President John F. Kennedy's decision to embrace the psychological benefits of space achievement, epitomized by the Apollo program, further deflected attention from the scientific deficits of the space program. In those first years of determining American priorities

[46] Horowitz to Derbyshire, 2 Mar. 1960, WESTEX Ad hoc, Committees, SSB Papers. One has to read between the lines to surmise motivations behind the sterilization/contamination controversy. Although their reasons are never spelled out, Berkner, Odishaw, and Lederberg disagreed on what NASA's position toward decontamination should be, especially in international agreements. Berkner and Odishaw refer vaguely to "legal commitments" and "State lawyers." See the correspondence between Lederberg, Berkner, and Odishaw, as well as memos from Derbyshire to Odishaw, in SSB Correspondence, 7–8/59 and 9–12/59, Box 28, Lederberg Papers.

[47] Lederberg to Audra Wolfe, 4 Apr. 2001. Krementsov describes the decree from the Central Committee, "On the Responsibility for Disclosure of State Secrets," in *Stalinist Science* (cit. n. 39), p. 141.

[48] Yet, as Walter McDougall explains, even that treaty allowed the continued development of satellite and surveillance technologies in space. See McDougall, *Heavens and the Earth* (cit. n. 1), pp. 415–420.

in space, however, life scientists vigorously argued that only a dedicated pursuit of exobiological research would justify NASA's existence.

The life scientists had come from outside NASA's administration, and many occupied the top rungs of the American scientific ladder. Lederberg had already received his Nobel Prize for medicine and physiology in 1958; Melvin Calvin received his for chemistry in 1960; Hartline would receive one for medicine and physiology in the late 1960s. Others, if not Nobel Prize winners, had established public reputations: Thomas Francis, for example, was well known for his role in conducting the polio vaccination trials of the mid 1950s. Their weight with the scientific community and even the general public was seen as a substantial asset in demonstrating the American space program's seriousness of purpose. They saw themselves as protectors of the national scientific order—and, by extension, America's place in the world order. But by 1962 the American space program had turned in a different direction and no longer needed the type of scientific validation that men like Lederberg, Calvin, and Francis would contribute. By late 1962 most of the original SSB life science advisors had left federal space advisory channels. Although the SSB still exists today, its members are now recruited more for their expertise in particular scientific fields than for their status as scientific luminaries.

The SSB's civilian life science advisors displayed a fascinating combination of self-reflection and denial. They carefully monitored their interactions with the media to minimize what they saw as distortions of their scientific program; they argued over which elements of their fears should be made public. They resisted the taint of military advising and security clearances, yet they encouraged NASA to develop close relationships with a biological weapons laboratory. These biologists were hardly duped into cooperation with the space program or its motivations. The fun-house logic of Cold War global politics—where expressions of American dedication to scientific freedom and cooperation were often covert ploys to defend the national interest—suggests the disturbing conclusion that the very scientists most dedicated to international cooperation made the best scientific nationalists. In Berkner's case, this appears to be true—but surely it is too harsh a judgment for someone like Aaron Novick, who seems truly to have feared a global epidemic spread by contaminated rockets.

What are we to make of these activist scientists who saw Fort Detrick as the most reliable institution for protecting earth and space from bacterial contamination? Clearly, they held greater faith in government institutions than our current postcolonial, post-Vietnam War, post-Cold War cultural perspective allows.[49] Considering that several members of WESTEX, especially Lederberg and Meselson, later became involved with efforts to control biological warfare, it is probably safe to assume that they would have opposed the use of exobiology as a tool for developing offensive biological weapons. Lederberg, Horowitz, and Meselson have denied knowledge of connections between the two programs (excepting the Fort Detrick designs);[50] however, as I explained earlier in this essay, the SSB was specifically designed to shelter its members from security clearances and secret

[49] I find it telling that more than one surviving WESTEX member expressed surprise at the suggestion that the Federal Bureau of Investigation might have maintained a file on him. For the record, none of the surviving scientists involved with WESTEX have granted me permission to request these potential files, which is, of course, their prerogative. The FBI will neither confirm nor deny the existence of personal files without the permission of a living individual. Considering that many of these scientists held public appointments, and most traveled extensively, it is likely that such files exist.

[50] Lederberg to Wolfe, 4 Apr. 2001; Norman Horowitz to Wolfe, 11 Apr. 2001; and Matthew Meselson to Wolfe, 18 Apr. 2001.

knowledge. At the same time, this is hardly a story of the exploitation of sheltered scientists. By offering their support for exobiology, Lederberg and his colleagues guaranteed a place for the life sciences in the space program.

Instead of attempting to evaluate the motivations of individual scientists, it is perhaps more useful to recognize that the general experience of civilian life science advisors within the SSB was not atypical for postwar American scientists. Scientists working with the National Institutes of Health, the National Science Foundation, and, of course, the Atomic Energy Commission all cooperated with institutions that, with or without their knowledge, supported secret projects and research. More to the point, all of these programs, with their emphasis on economic growth and national achievement, served the national interest. A simple categorization of scientists as "insiders" or "outsiders" no longer adds to our historical understanding of the Cold War, nor does it accurately reflect the lived experience of scientists who participated in these programs. Additional studies of the mechanisms for building popular, political, and military support for Cold War research programs will further cloud this issue, not clarify it. The contradictions that characterized early American exobiology are typical for a period in which the boundaries between civilian and military interests were blurred almost beyond recognition.